查询250B20B501A1CA供应商

CTS®

Series 250 Technical Data

Commercial Composition 9mm Diameter Variable Resistors

- Miniature 9mm size
- Low cost
- Bushing mount or PC mount
- Dual control
- Detent available

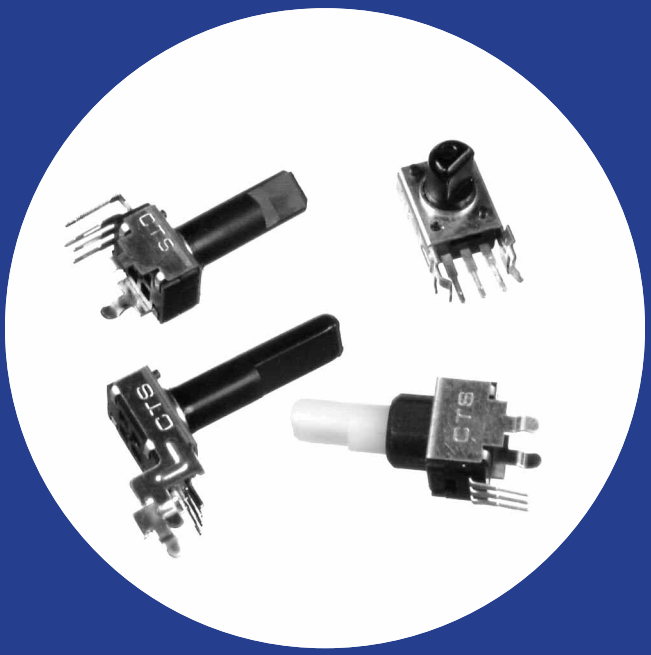

Electrical and Mechanical Specifications

Resistance Range
Standard: 500 ohms through 1 megohms.
Special: For non-standard resistance values, please contact CTS.

Resistance Tolerance
Standard: ±20%
Special: Tighter tolerances available in most resistance values.

Resistance Taper
Standard: Linear
Special: Available

Power Rating
Single section - 0.05 watts @ 50°C derated to no load @ 85°C for linear curve.
Dual section - 0.03 watts @ 50°C derated to no load @ 85°C for linear curve.

Dielectric Strength
Withstands 250 VAC for 1 minute

Insulation Resistance
100 megohms minimum at 250 VDC

Maximum Operating Voltage
50 VAC, 20 VDC

Angle of Rotation
Total Rotation: 280° ± 5°

Rotational Torque
10-100 g-cm

Stop Strength
3kg-cm minimum

Detent
50% detent available in single section units

Pull-Push Strength
5kgf maximum

Rotational Life
Single seciton - 5K cycles
Dual section - 2K cycles

Slide Noise
Less than 100mV (measured by JIS C6443)

Gang Error
Within 3dB at –40 to 0 dB

Insertion Loss
0.1 dB maximum

250 B or X

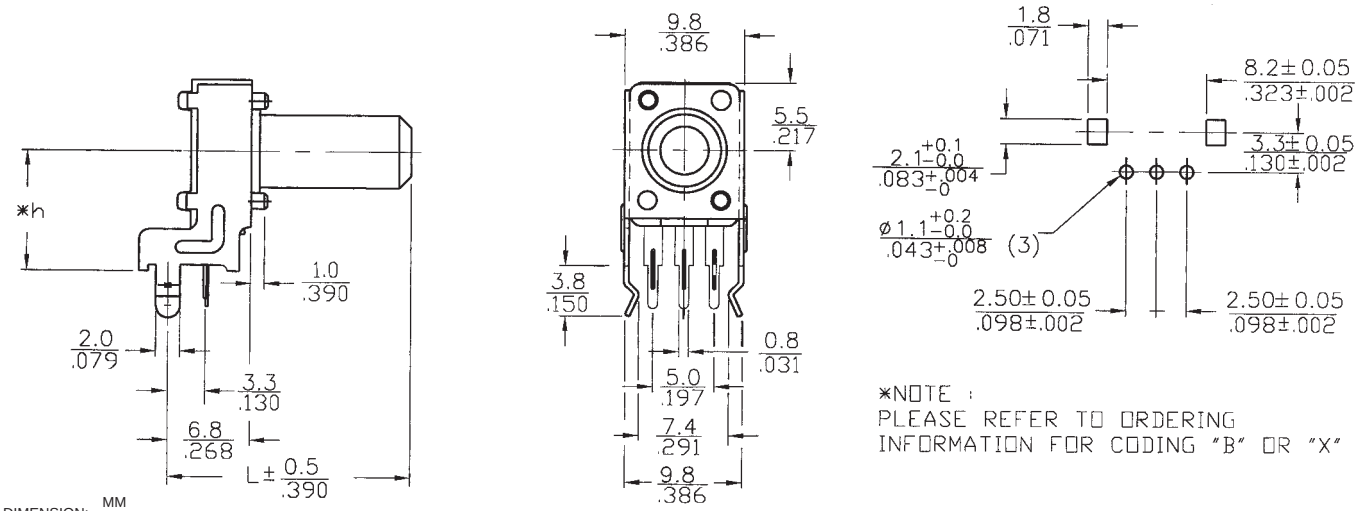

DIMENSION: MM / INCH

250Y

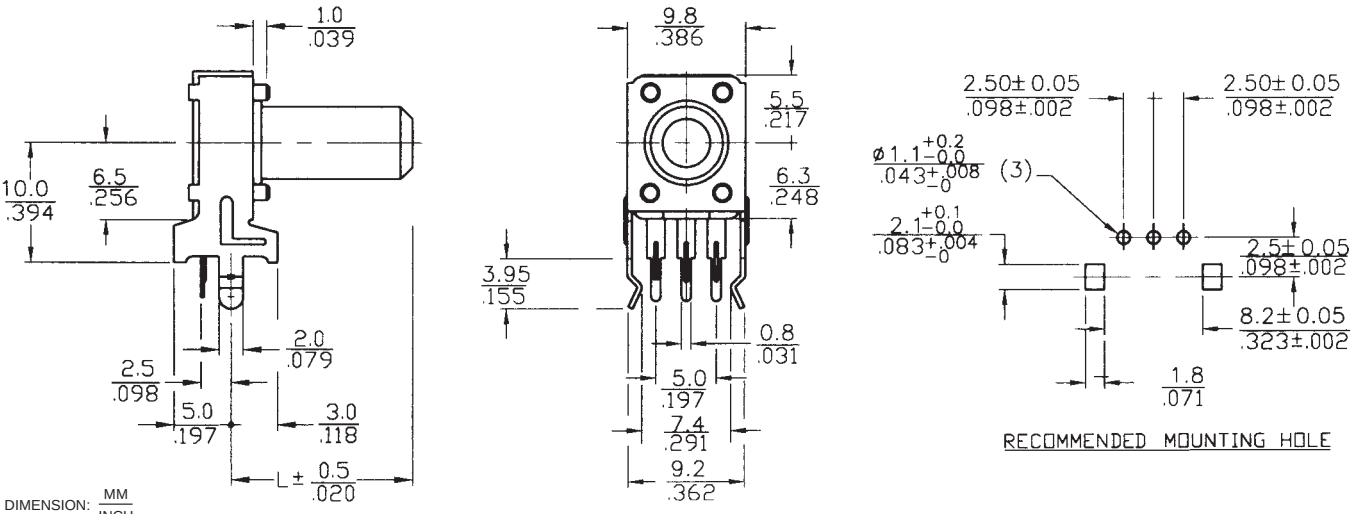

DIMENSION: MM / INCH

250U

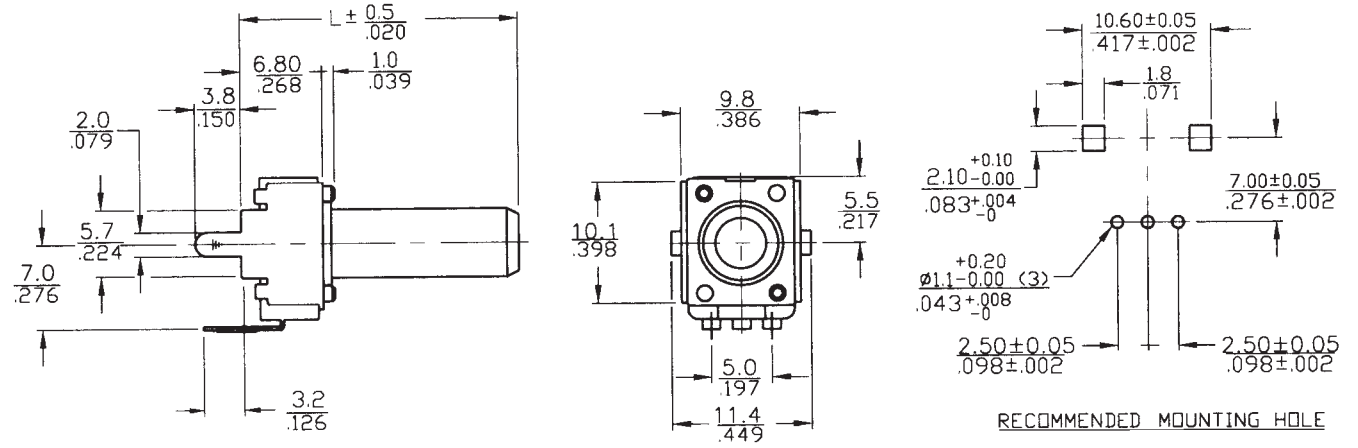

DIMENSION: MM / INCH

UM250 With Bushing

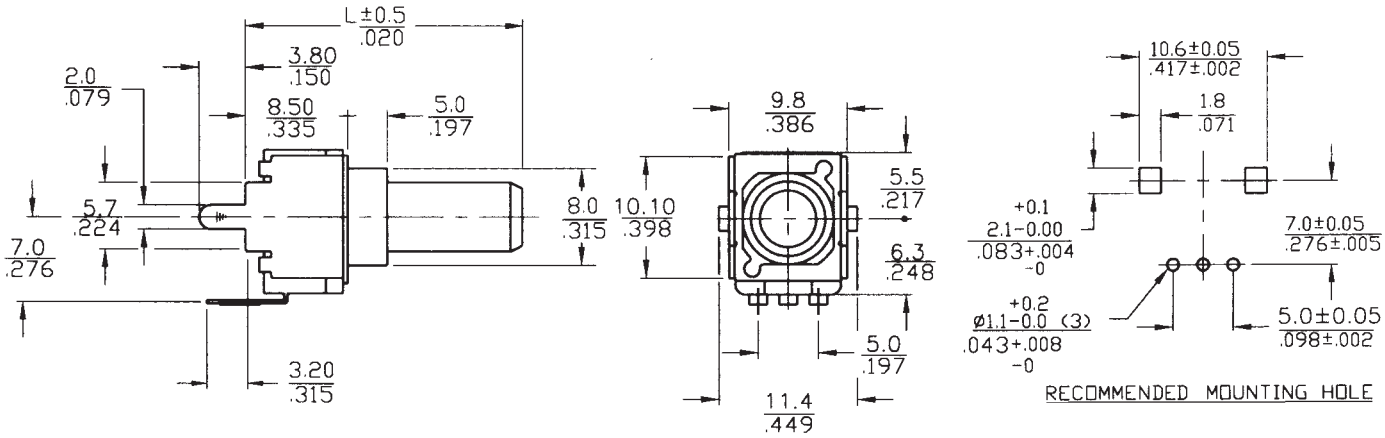

DIMENSION: MM / INCH

XMD250RE

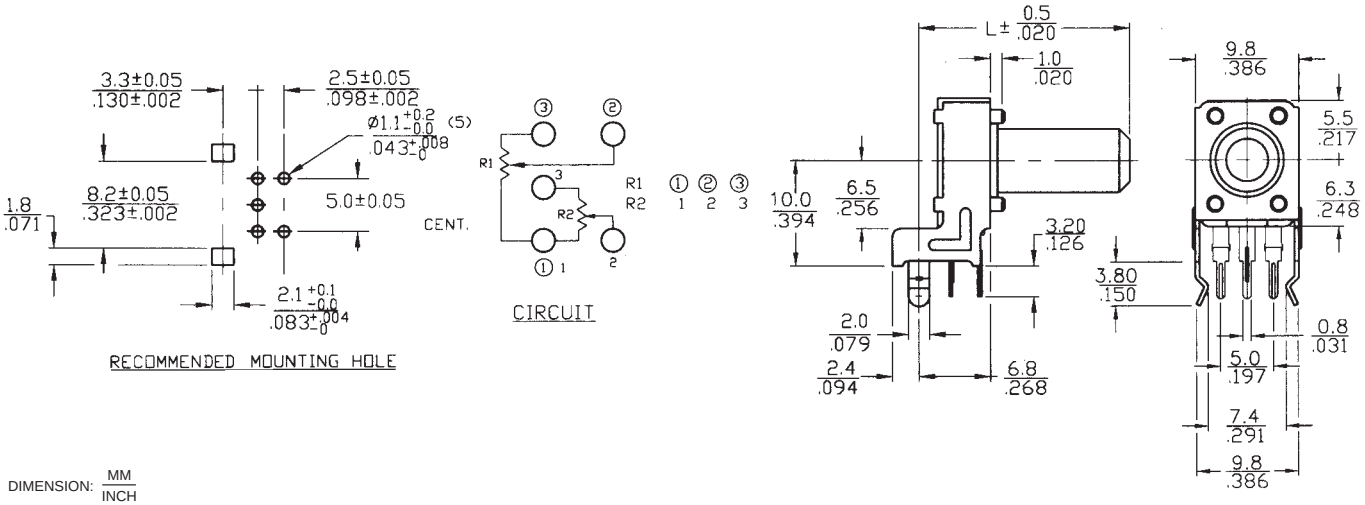

DIMENSION: MM / INCH

YMD250RE

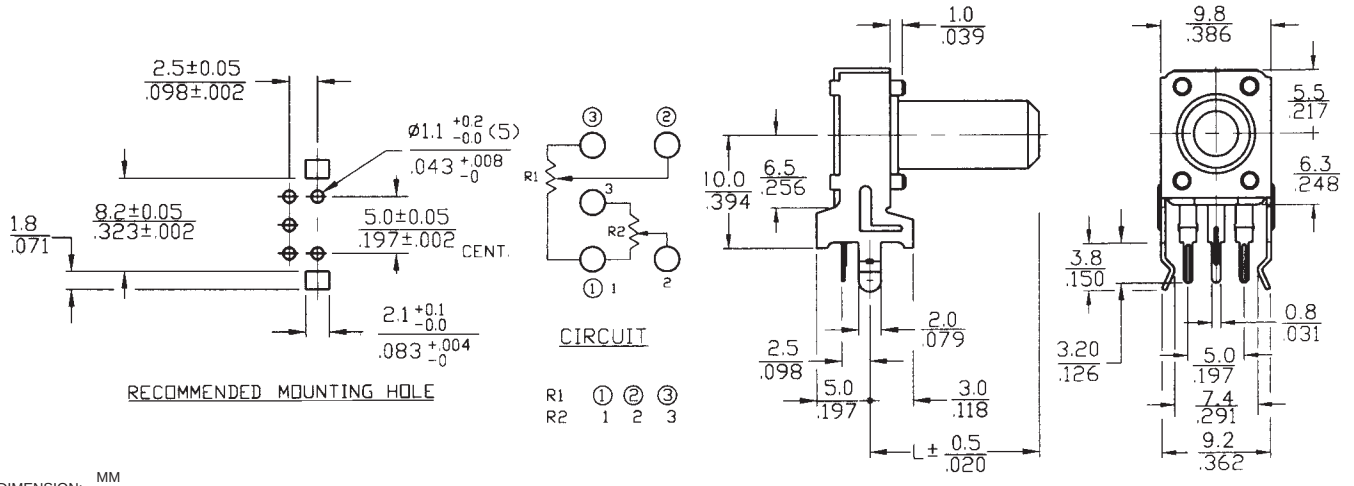

DIMENSION: MM / INCH

UMD250RE

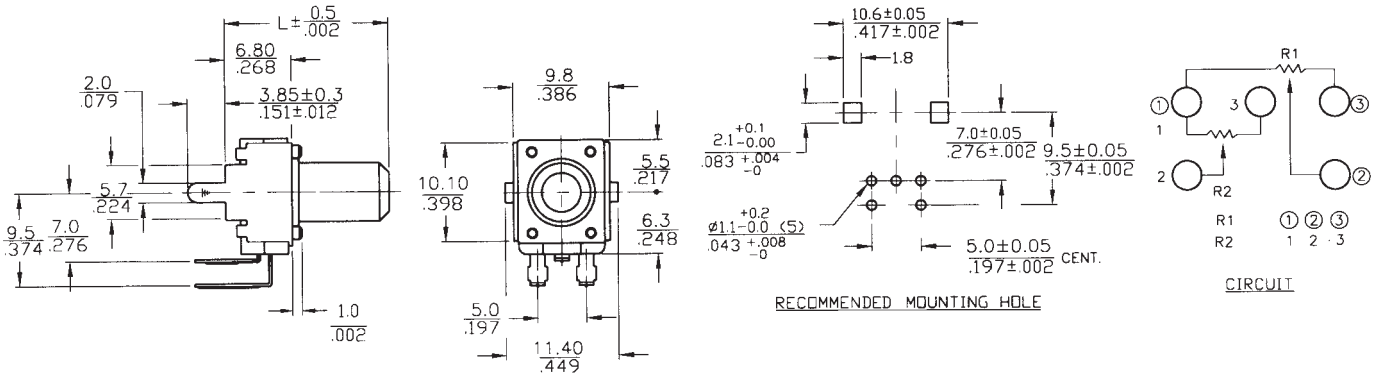

DIMENSION: MM / INCH

Ordering Information

250 U 20 F 102 B 1 N A

U – PC FORMED TO REAR
B – 6.5MM HEIGHT, P.C. (SINGLE SECTION ONLY)
X – 10.0MM HEIGHT, P.C.
Y – 10.0MM HEIGHT, P.C. COVER EAR IN FRONT OF TERMINALS

"L" SHAFTS LENGTH

*15 – 15MM
**20 – 20MM
**25 – 25MM
30 – 30MM
*NOT AVAILABLE IN SINGLE SECTION WITH BUSHING OR DUAL SECTION
**NOT AVAILABLE IN DUAL SECTION

RESISTANCE CODE EXAMPLES

CODE	RESISTANCE
501	500Ω
102	1K
252	2.5K
502	5K
103	10K
253	25K
503	50K
104	100K

TAPER

1 – LINEAR
2 – CW 10% AUDIO
3 – CCW 10% AUDIO
4 – CW 15% AUDIO
5 – CCW 15% AUDIO
6 – CW 20% AUDIO
7 – CCW 20% AUDIO
8 – CW 30% AUDIO
9 – CCW 30% AUDIO
A – CW 5% AUDIO
B – CCW 5% AUDIO

DETENT

N– NO DETENT
* **C**– CENTER DETENT
* NOT AVAILABLE IN DUAL SECTION

SHAFTS TRIM

* **B** – KNURLED 24 TEETH, 4MM DIAMETER
F – FLATTED 4.5MM, THICKNESS 6MM DIAMETER
**L – KNURLED 40 TEETH, 6MM DIAMETER
* NOT AVAILABLE IN SINGLE SECTION WITH BUSHING OR DUAL SECTION
**NOT AVAILABLE IN DUAL SECTION

RESIST TOL

A – ±10%
B – ±20%
C – ±30%

*A – DUAL SECTION WITH BUSHING
*B – SINGLE SECTION WITH BUSHING
D – DUAL SECTION
BLANK – SINGLE SECTION WITHOUT BUSHING
*U STYLE TERMINALS ONLY

Order From:

CTS CORPORATION, ELECTROCOMPONENTS / 1601 Mishawaka Street / Elkhart, Indiana 46514
North America Toll Free (888) 287-4690 / (219) 296-6700 / FAX: (219) 293-1240 http://www.ctscorp.com

CTS COMPONENTS TAIWAN, LTD. / 7, Central 6th Road (Chung Liu Road) / P.O. Box 26-20
Kaohsiung Export Processing Zone / Kaohsiung, Taiwan, Rep. of China
(07) 8216145 / FAX: (07) 8417642.8110040

5m-4-99I